Retainer “R” / R60P

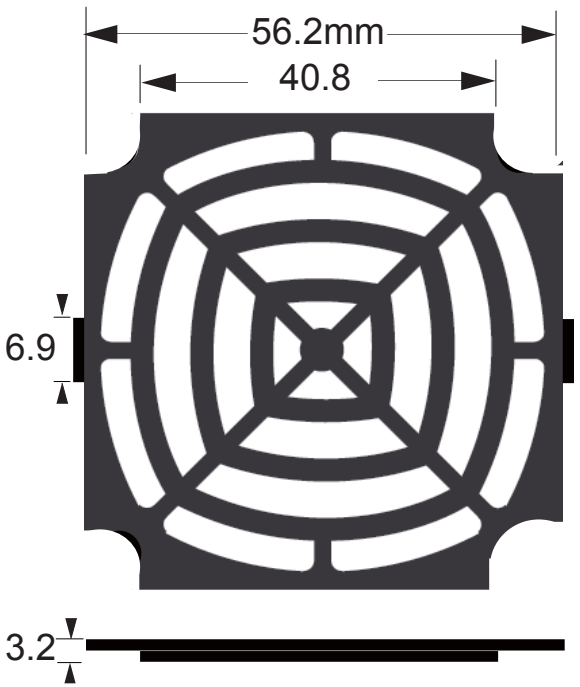

Media “M” / M60-30

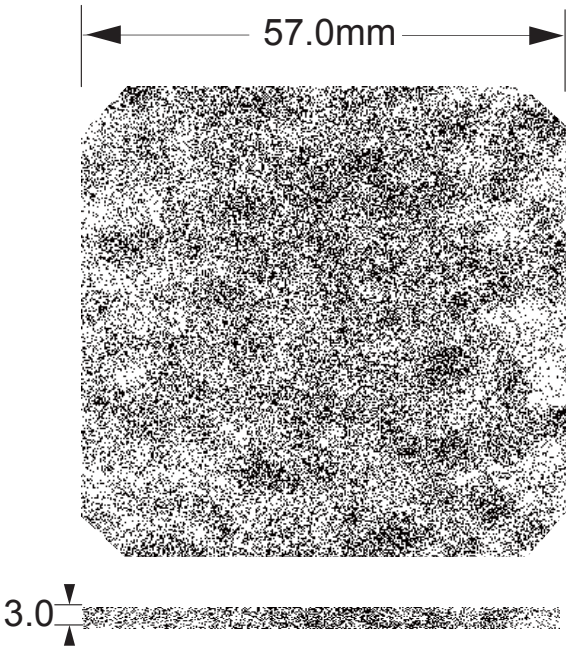

Guard “G” / G60P

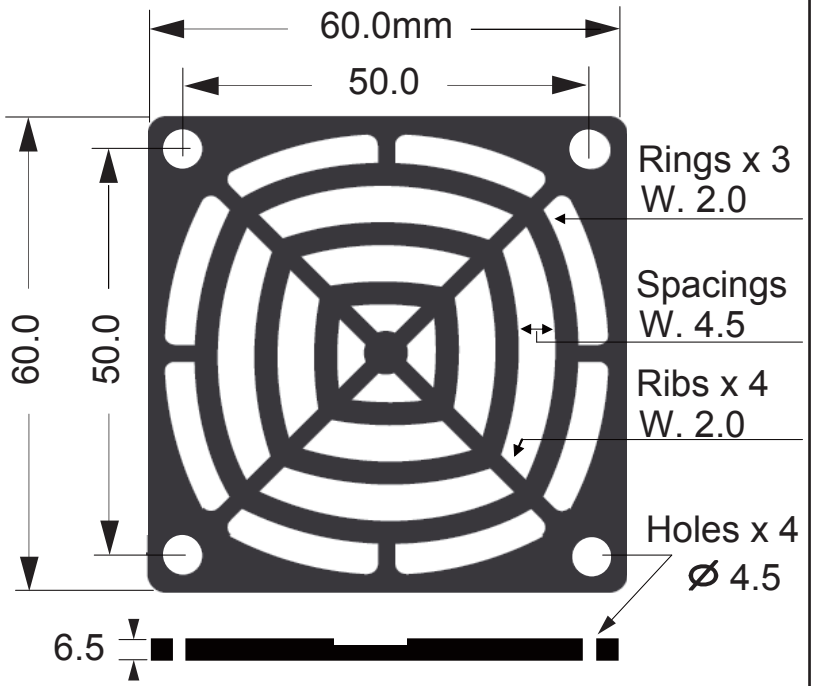

Media filtering holes(PPI)
30 PPI (30 holes per sq. inch)
*PPI=Porous Per Inch

Specification / Material:

- General tolerance unless noted is ± 0.3mm
- Plastic guard “G” & Retainer “R” made of plastic ABS764 glass reinforced flammability rated UL94V-0
  Media “M” is made of PU foam
- Color: black / Filtering holes: 30PPI / Weight: 9.5Gm

Model No:

EPF60-30

(Plastic Fan Filter Kits For 60mm (2.36") Fans)

Tel: +886-2-8797-5009 *Fax: +886-2-8797-5228* *www.eagroup.com.tw* *Email: jeffrey@eagroup.com.tw*